PROJECT 07: Design and Analysis of Ring Oscillator by using Cadence Virtuoso

A Comprehensive Study of Analog Circuits

By: Priya Chaudhary, Astitva Johri and

Bhavya Solanki

Chapters:

List of Figures……..……. 3

1. Introduction …….. 4
2. Brief Description…… 5
3. Circuit Design……. 6-7
   3.1 Ring Oscillator Design……..……... 6
   3.2 Simulation Setup in Cadence Virtuoso …… 6
   3.3 Analysis and Results…… 7
4. Simulation Results…….. 8
5. Advantages and Disadvantages…….. 9
   5.1 Advantages……. 9
   5.2 Disadvantages……. 9
6. Conclusion…….. 10
7. Frequently Asked Questions (FAQs)…….. 11

LIST OF FIGURES

Figure 3.1 Circuit of Ring Oscillator ……..…… 7

Figure 4.1 Simulation Results of Ring Oscillator…… 8

1. INTRODUCTION

The ring oscillator is a critical component in the design of digital and analog circuits. Its applications range from clock generation, frequency synthesis, and timing circuits to integrated testing and measurement. Unlike traditional oscillators that rely on external components like crystals or LC tanks, a ring oscillator achieves oscillation using a feedback loop consisting of inverters. The simplicity of its design and the ability to integrate it fully on a chip make it a popular choice for many applications.

Cadence Virtuoso is a powerful Electronic Design Automation (EDA) tool widely used for designing and simulating integrated circuits. In this documentation, we delve into the step-by-step process of designing and analyzing a ring oscillator using Cadence Virtuoso. This includes setting up the circuit, running simulations, and evaluating the performance metrics of the oscillator.

2. BRIEF DESCRIPTION

A **Ring Oscillator** is a simple electronic circuit that generates a periodic oscillating signal by utilizing a feedback loop of inverters or logic gates. The circuit typically consists of an odd number of inverters (usually 3, 5, or 7) connected in a closed loop, with the output of the last inverter fed back to the input of the first.

Key Features:

- **Odd Number of Inverters**: The signal feedback results in a continuous oscillation.
- **Oscillation Mechanism**: The signal propagates through the inverters, causing the output to switch between high and low states. This switching generates a square wave oscillation.
- **Frequency Determination**: The oscillation frequency is primarily determined by the number of inverters in the loop and the delay of each inverter.

Applications:

- Clock Generation
- Test and Characterization
- Random Number Generation

3. CIRCUIT DESIGN

3.1 Ring Oscillator Design

1. Inverter Selection: Choose an appropriate CMOS inverter with a suitable threshold voltage, transistor sizing (W/L), and technology parameters.
2. Loop Connection: Connect the output of the last inverter to the input of the first inverter to form a closed feedback loop.
3. Power Supply: Connect the inverters to a DC power supply (Vdd) and ground (Vss).

In Cadence Virtuoso, this involves:

- Using the Library: Select the relevant standard cell library for inverters.
- Layout & Schematic: Design the schematic of the ring oscillator by connecting the inverters.

3.2 Simulation Setup in Cadence Virtuoso

1. Set up the Simulation: In Cadence Virtuoso, use Spectre or Analog Design Environment for transient simulations.
2. Simulation Parameters:
    - Define the simulation time based on the expected frequency of oscillation.
    - Set the time step small enough to capture the transient behavior of the circuit.
    - Use initial conditions for voltage values across nodes to ensure stable oscillation.
3. Start Simulation: Run the transient analysis and observe the output waveform.

3.3. Analysis and Results

Once the circuit is simulated, it's time to analyze the oscillation waveform and extract important performance metrics such as the frequency and waveforms.

Performance Metrics:

- Oscillation Frequency: Measure the time period of the output waveform to determine the oscillation frequency.
- Waveform: The waveform should exhibit a periodic oscillation with a stable frequency and amplitude.
- Power Consumption: Measure the power consumed by the Ring Oscillator and analyze the efficiency.

In Cadence Virtuoso, use the Results Browser to extract waveform data and compute:

- Frequency: Measure the oscillation period using the waveform cursor tool.
- Power: Use the Power Analysis tool to measure dynamic and static power.

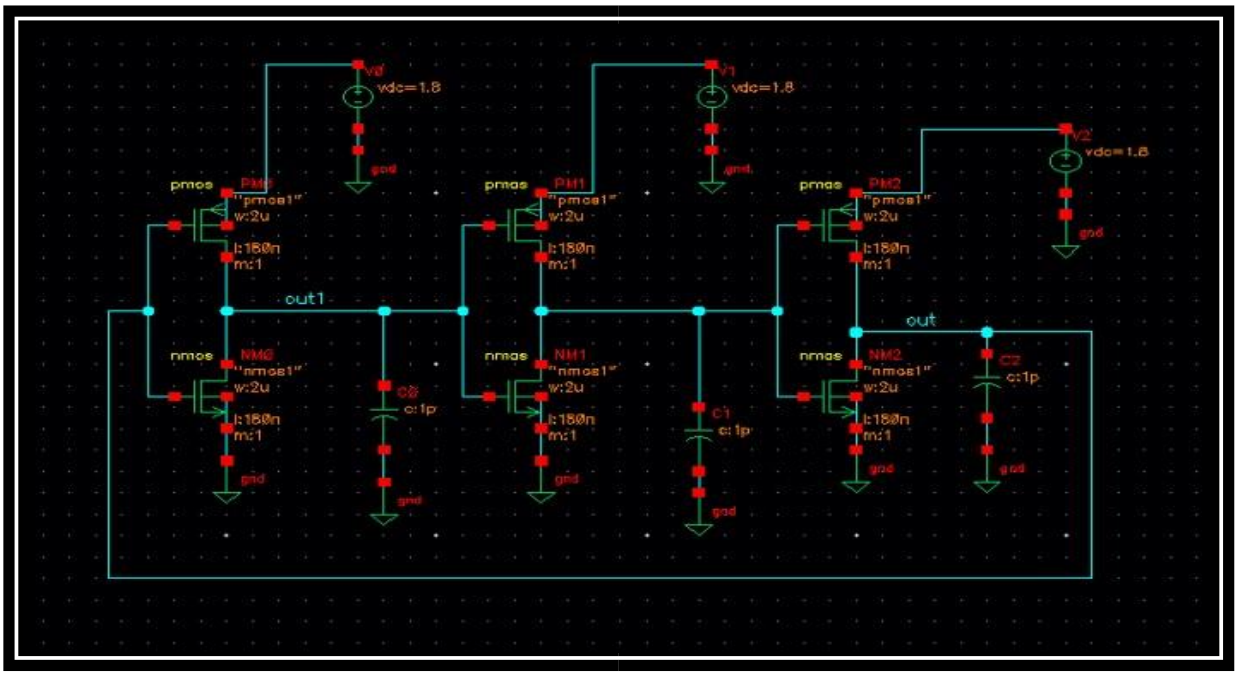

Figure 3.1 Circuit of Ring Oscillator

4. SIMULATION RESULTS

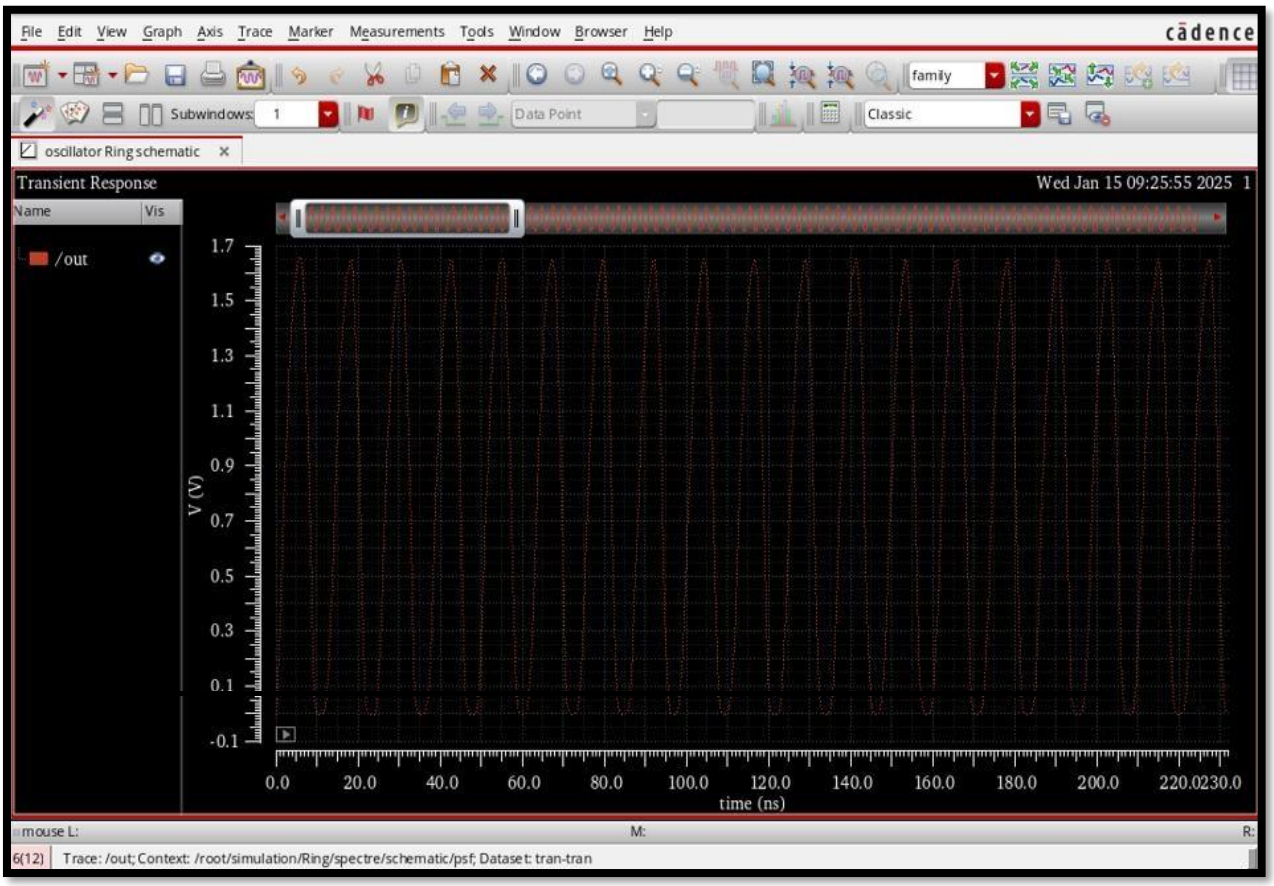

Figure 4.1: Simulation Results of Ring Oscillator

5. ADVANTAGES AND DISADVANTAGES

5.1 Advantages:-

1. **Simplicity:** Ring Oscillators are simple circuits with minimal components. They require no external clock source and are easy to design.
2. **Low Power Consumption:** Circuits consume less power compared to other oscillators, especially when used for low-frequency applications.
3. **Wide Frequency Range:** The frequency can be adjusted by modifying the number of inverter stages or the sizing of transistors.
4. **Cost-Effective:** The implementation is straightforward, making it a cost-effective solution for generating clock signals.

5.2 Disadvantages:-

1. **Poor Frequency Control:** The frequency is primarily dependent on the delay of the inverters, which may not be easily controlled in realworld applications.
2. **Jitter and Noise:** Ring Oscillators can suffer from jitter (random fluctuations in timing) and noise, which can degrade the accuracy of the signal.
3. **Limited Stability:** The stability of the oscillation can be compromised if the inverter delay is not properly balanced, which could lead to unreliable behavior.

6. CONCLUSION

The design and analysis of a ring oscillator using Cadence Virtuoso provide valuable insights into the oscillator's behavior and performance. By leveraging Cadence's simulation capabilities, engineers can optimize the design for specific applications, ensuring robustness against process, voltage, and temperature variations. The ability to fully integrate a ring oscillator on a chip while maintaining control over critical parameters makes it a versatile and essential component in modern integrated circuits.

By following the detailed steps outlined in this documentation, users can confidently design, simulate, and analyze ring oscillators, paving the way for their use in a wide range of applications.

The Ring Oscillator is a fundamental circuit used for generating oscillations without a clock source. By designing it in **Cadence Virtuoso**, we can analyze various parameters such as frequency, power consumption, and stability. Despite its simplicity and low power consumption, it has limitations like jitter and poor frequency control. However, it remains a valuable tool in areas such as testing and low-frequency applications.

7. FREQUENTLY ASKED QUESTIONS (FAQs)

Q1: What is the ideal number of stages for a Ring Oscillator?

Answer: The ideal number of stages is typically 3, 5, or 7. The number of stages must be odd to ensure that the circuit oscillates correctly.

Q2: How can the frequency of oscillation be controlled?

Answer: The frequency can be controlled by adjusting the transistor sizes (W/L ratios) and the number of inverter stages in the Ring Oscillator.

Q3: Can a Ring Oscillator be used for high-frequency applications?

Answer: While Ring Oscillators are suitable for low-to-moderate frequencies, they may not be ideal for high-frequency applications due to their inherent instability and jitter issues.

Q4: What factors affect the performance of a Ring Oscillator in Cadence Virtuoso?

Answer: Factors such as transistor sizing, capacitance, power supply voltage, and the number of stages affect the performance of the Ring Oscillator.

Q5: How do I analyze the stability of my Ring Oscillator in Cadence Virtuoso?

Answer: You can analyze the transient waveform and look for stable oscillations with consistent frequency and waveform shape. Also, check the rise and fall times, and ensure the duty cycle is as expected.